NEWTRAL



USER MANUAL

FREEDOM-X- FF

Home Office chair

Parts List

(Note: Drawings are only for reference)



BACKREST **x1**



CHAIR SEAT **x1**

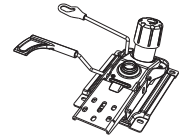

MECHANISM **x1**



LEFT ARMREST **x1**



RIGHT ARMREST **x1**



GAS LIFT **x1**

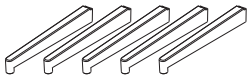

BASE PART 1 **x5**



BASE PART 2 **x1**



BASE PART 3 **x1**



WHEELS **x5**



SCREWS COVER **x1**



SILICONE PADS **x4**



CHAIR BACKREST SCREWS **x3**

M8*16mm



ARMRE STSCREWS **x8**

M6*20mm



MECHANISM SCREWS **x4**

M6*20mm



BASE SCREWS **x10**

M6*12mm



ALLEN KEY **x1**

Installation Guide

1 Armrest Assembling

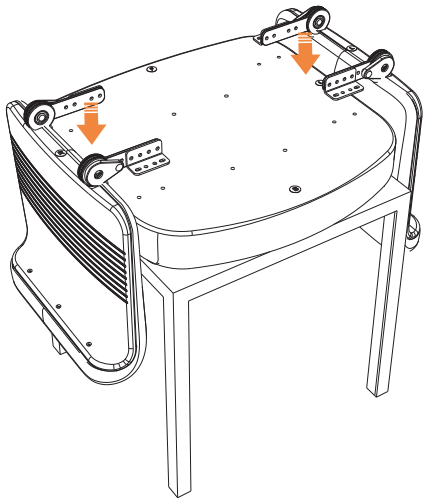

ARMREST
SCREWS

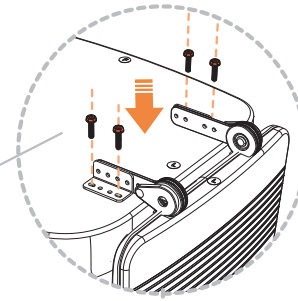

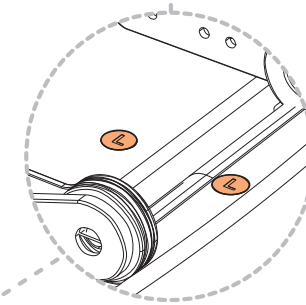

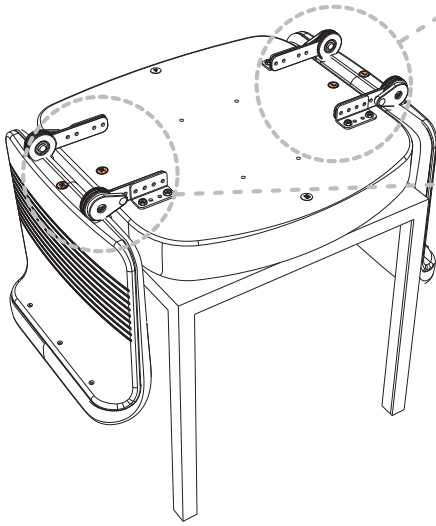

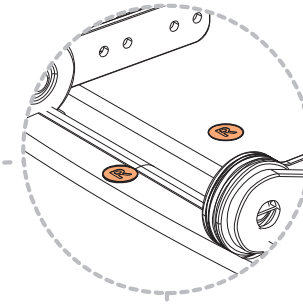

ARMREST
SCREWS

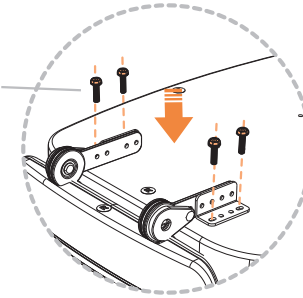

2 Mechanism Assembling

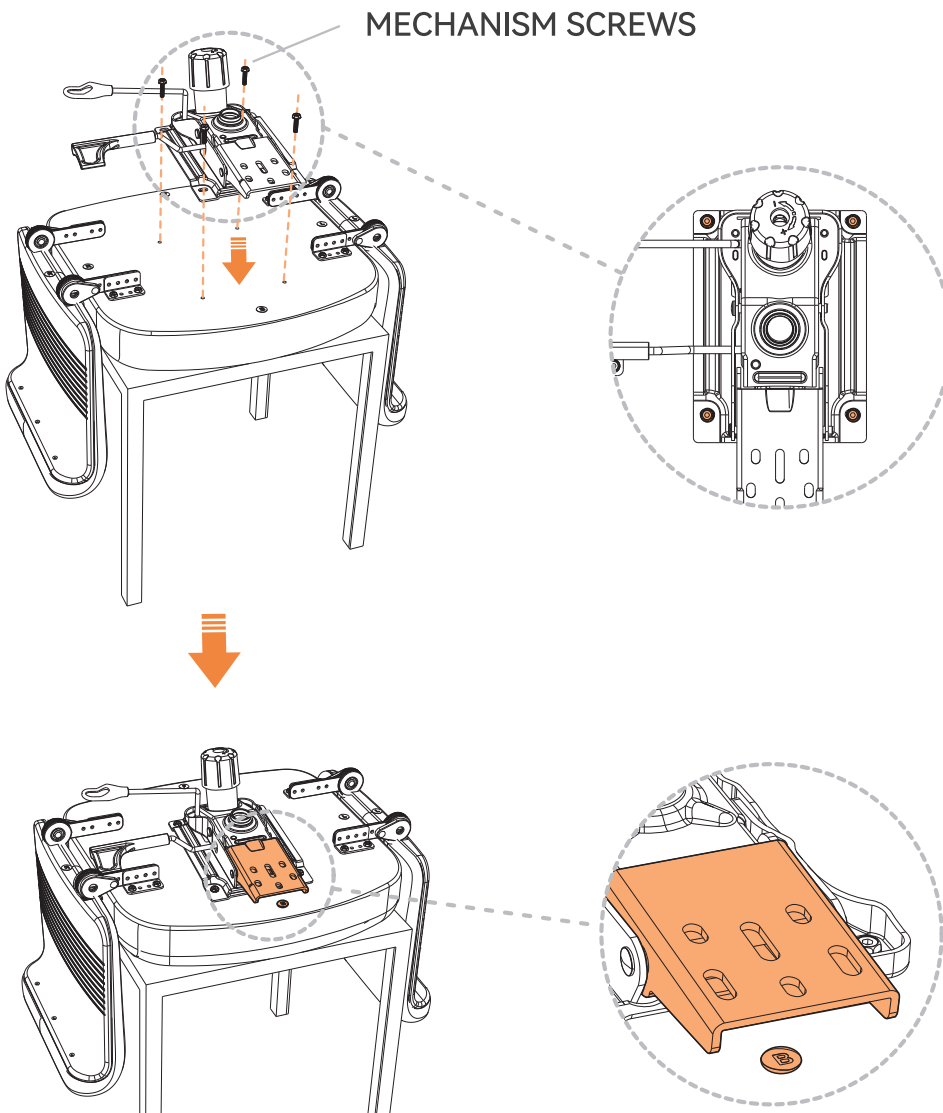

3 Backrest Bracket Assembling

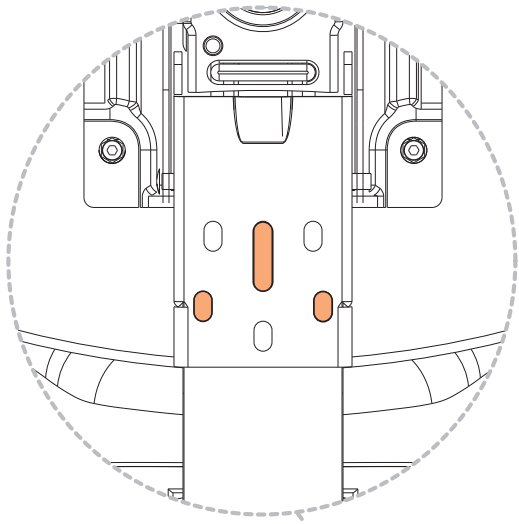

CHAIR
BACKREST
SCREWS

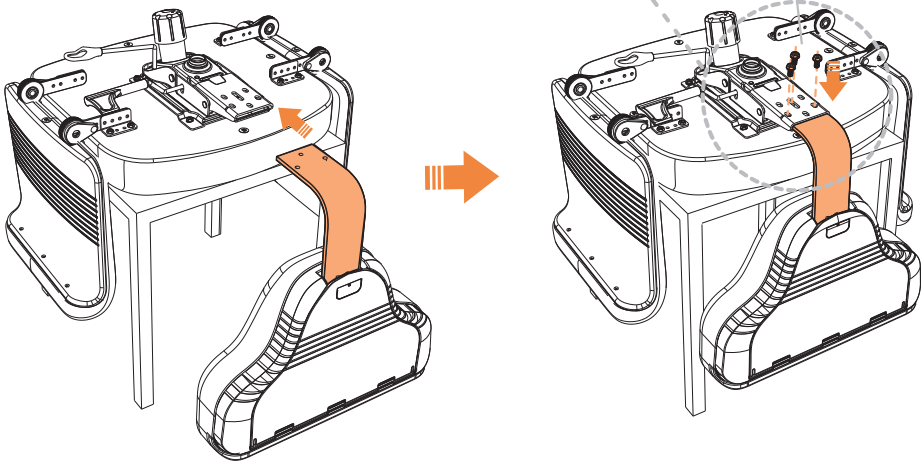

4 Base Assembling | Gas Lift Assembling | Wheels Assembling

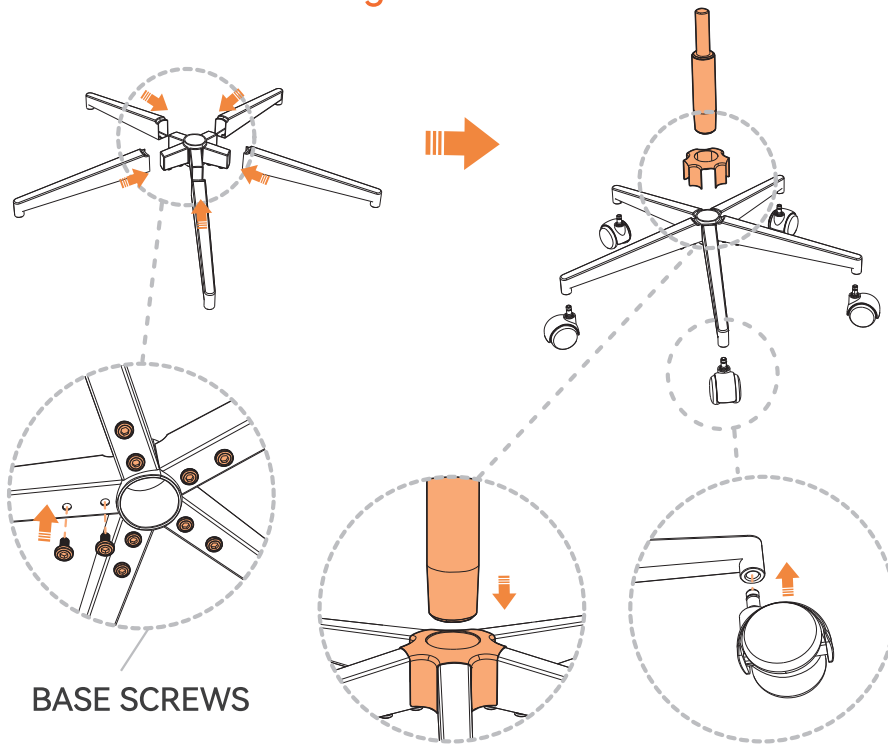

5 Put the Seat and Base Together

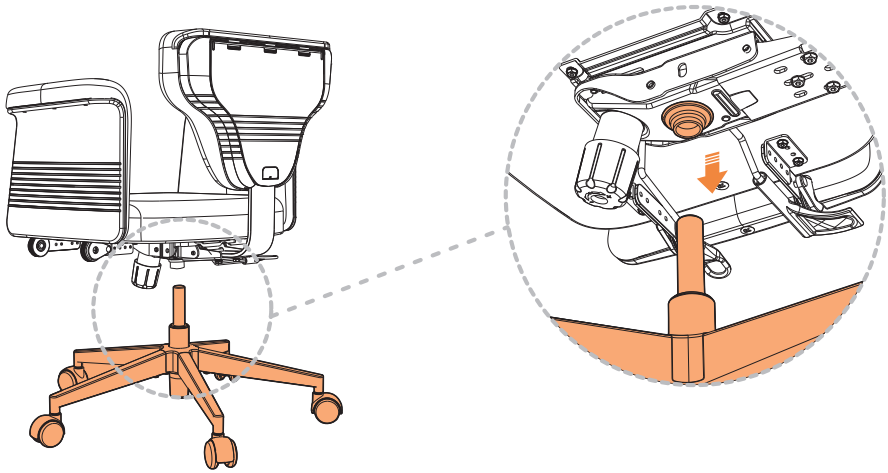

6 Screws Cover Assembling
Silicone Pads Assembling

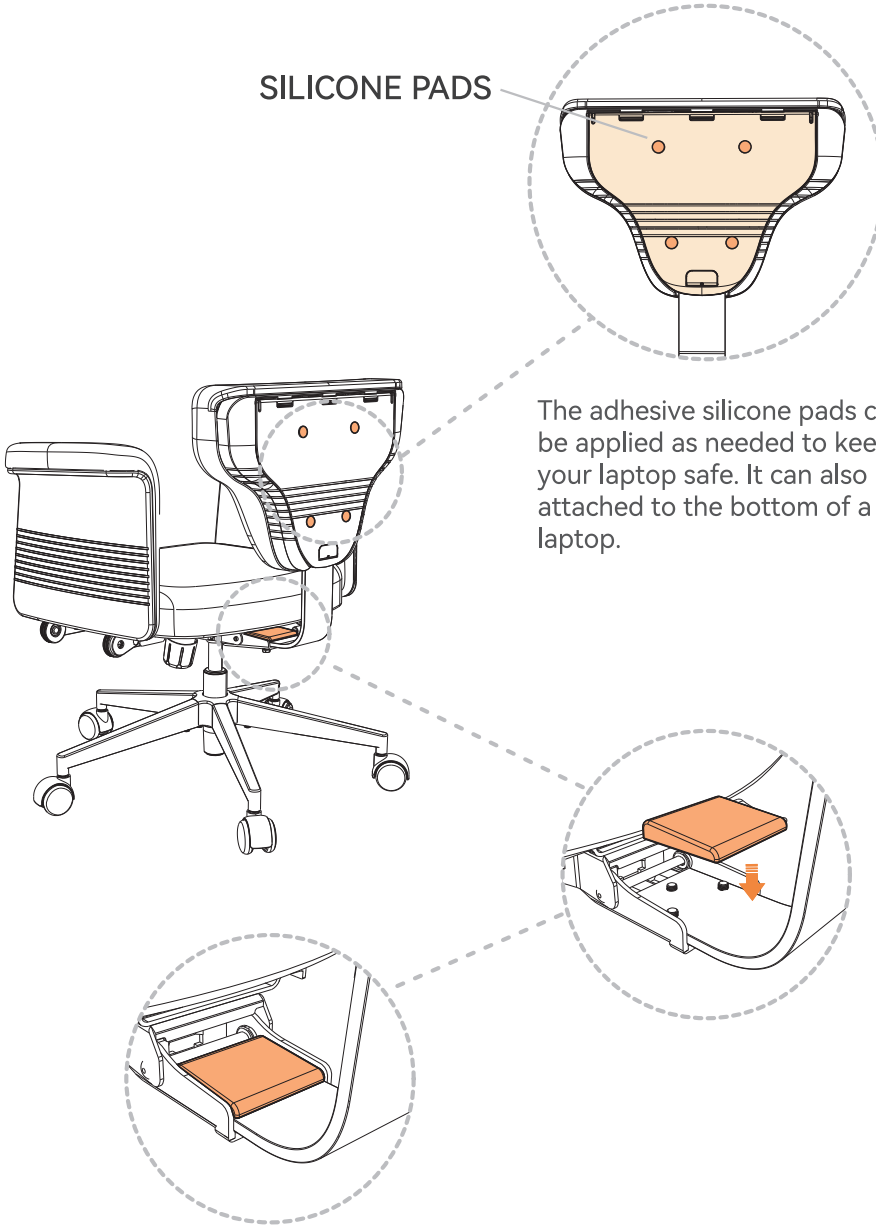

The adhesive silicone pads can be applied as needed to keep your laptop safe. It can also be attached to the bottom of a laptop.

Adjustment Instructions

Please note: Liting the backrest to the highest height, the backrest can not be locked, and it will reset to the lowest height.

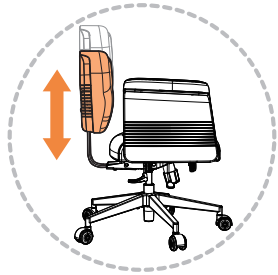

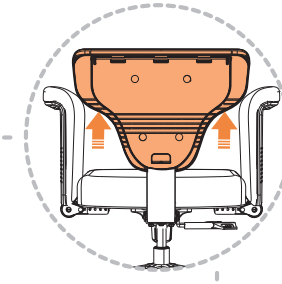

Seat Back Height Adjustment

lift up the backrest slowly and stop at wher-ever you feel comforlable

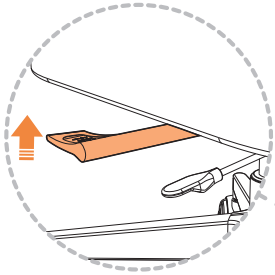

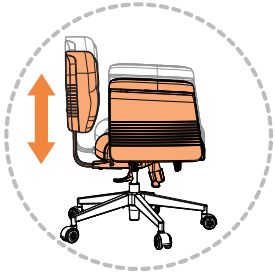



Seat Height Adjustment

lift up the lever and stop at wherever you feel comfortable

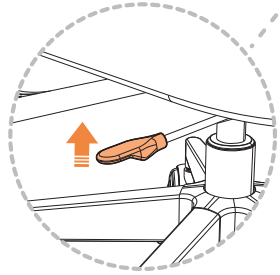

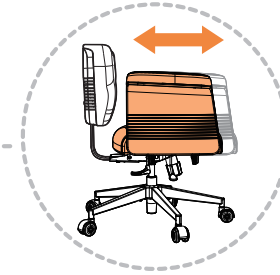

Seat Depth Adjustment

Lift up the lever, meanwhile move the seat forward/backward, then stop at wherever you feel comfortable.

Please Note: If you do not lean your body back on the back-rest with force when unlocking the adjustment mechanism, the backrest will get stuck, and it will not restore to the upright position.

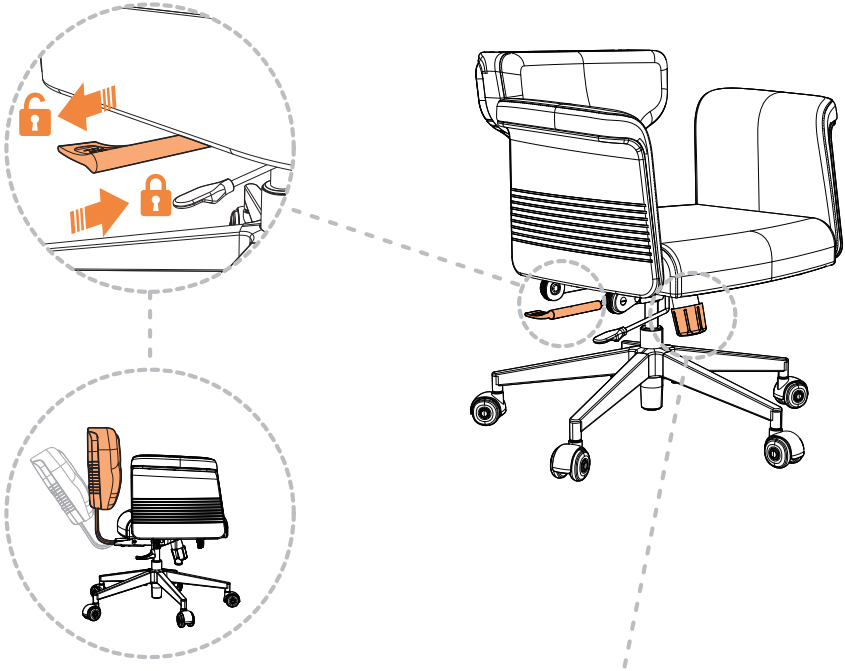

Seat Back Tilt Adjustment

Pull the lever outward to release backrest; Push the lever inwward to lock backrest upright

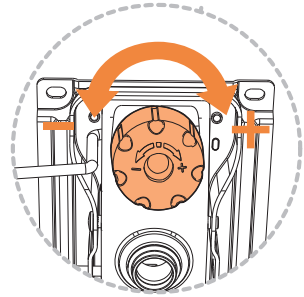

Backward Tilt Strength Adjustment

Adjust the back tilt strength according to the direction.

The armrest needs to be rotated inward to the final position to unlock it before it can be opened outward



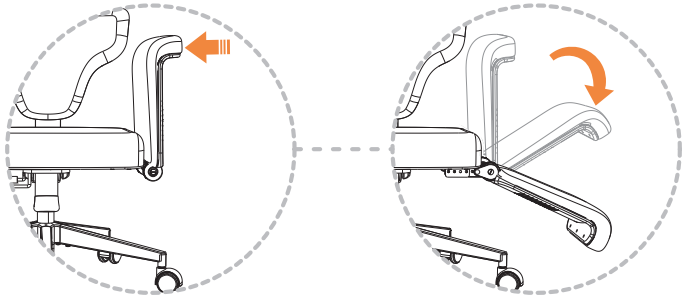

The armrest is adjustable with eight lock positions.

To fold down the tabletop, first rolate it upward to the final position to unlock it, then you can push it down and fold it.

The tabletop can be rotated open and is adjustable with three lock positions.

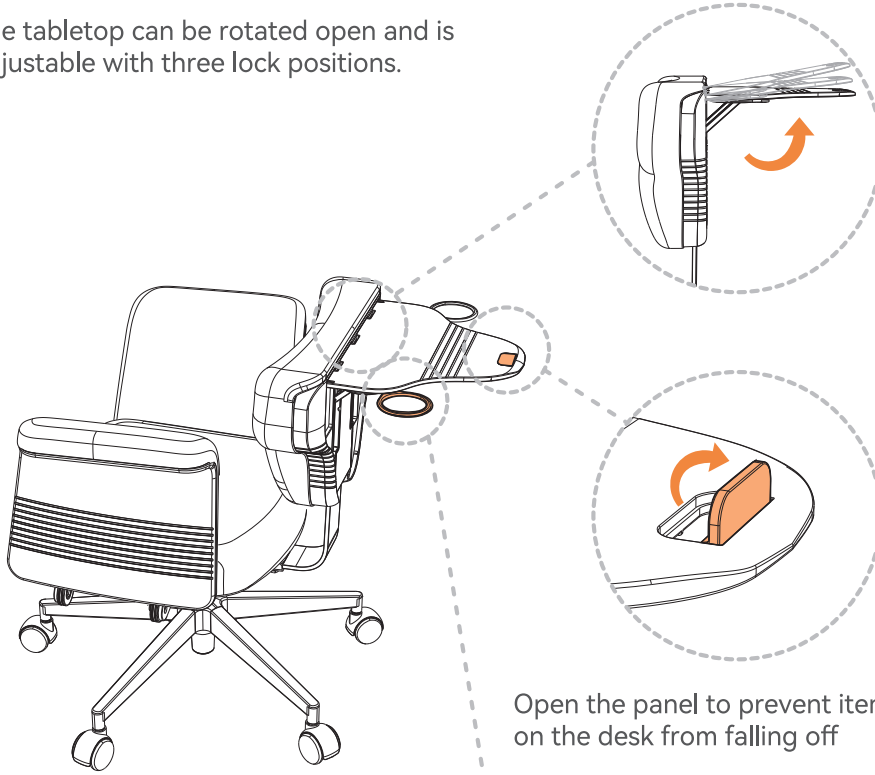

Open the panel to prevent items on the desk from falling off

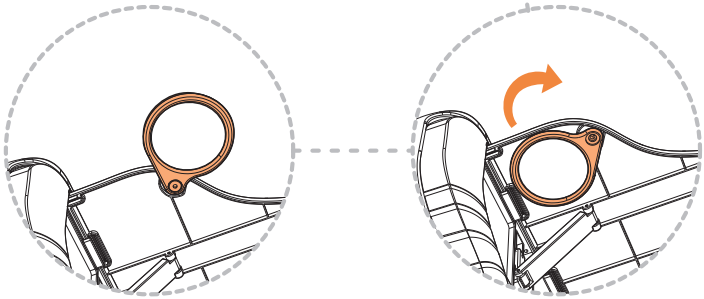

Coffee cup holder can be rotated to open