MTLCMA22S

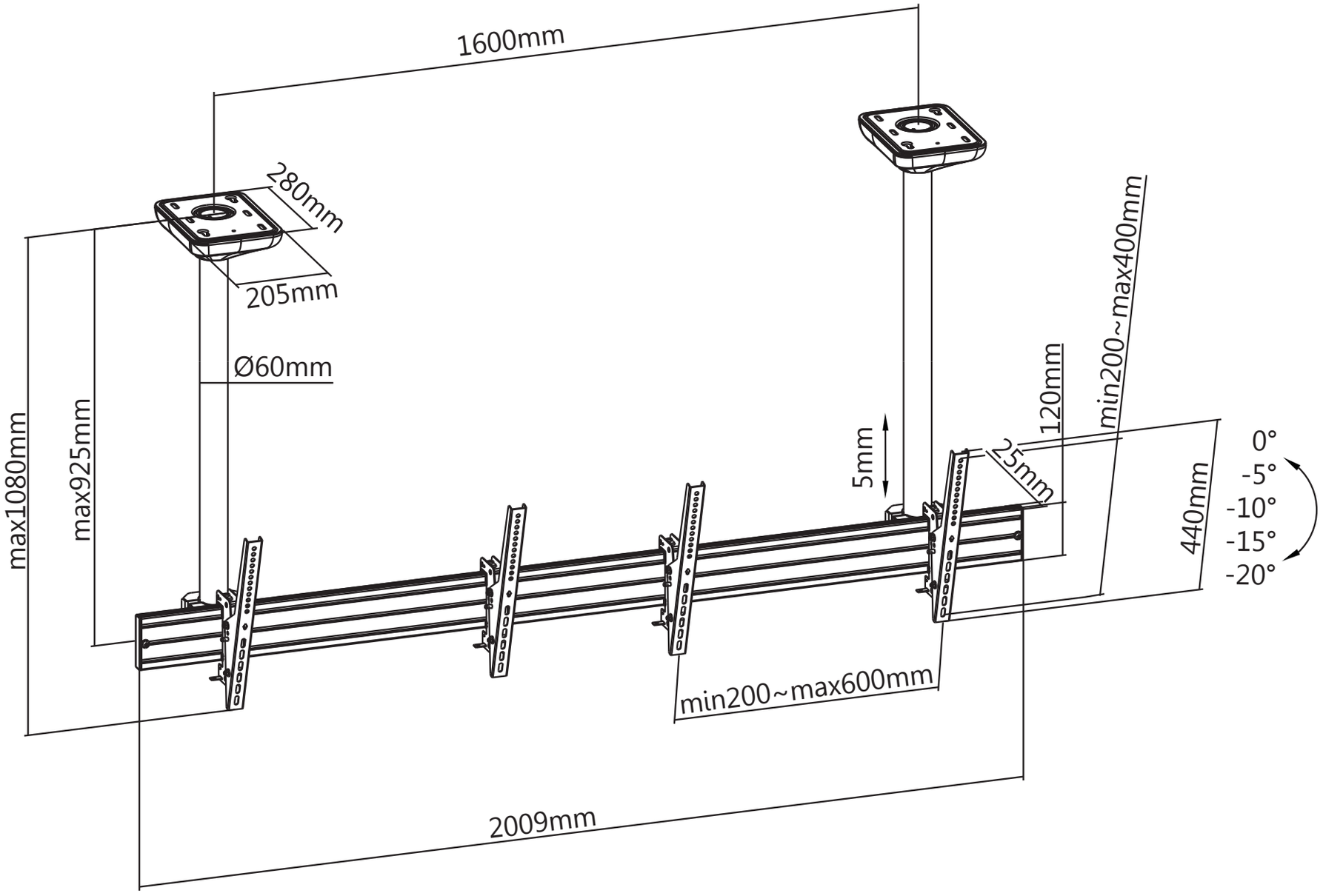
1600mm
280mm
205mm
Ø60mm
max1080mm
max925mm
5mm
25mm
120mm
min200~max400mm
440mm
0°
-5°
-10°
-15°
-20°
min200~max600mm
2009mm

MTLCMA22L

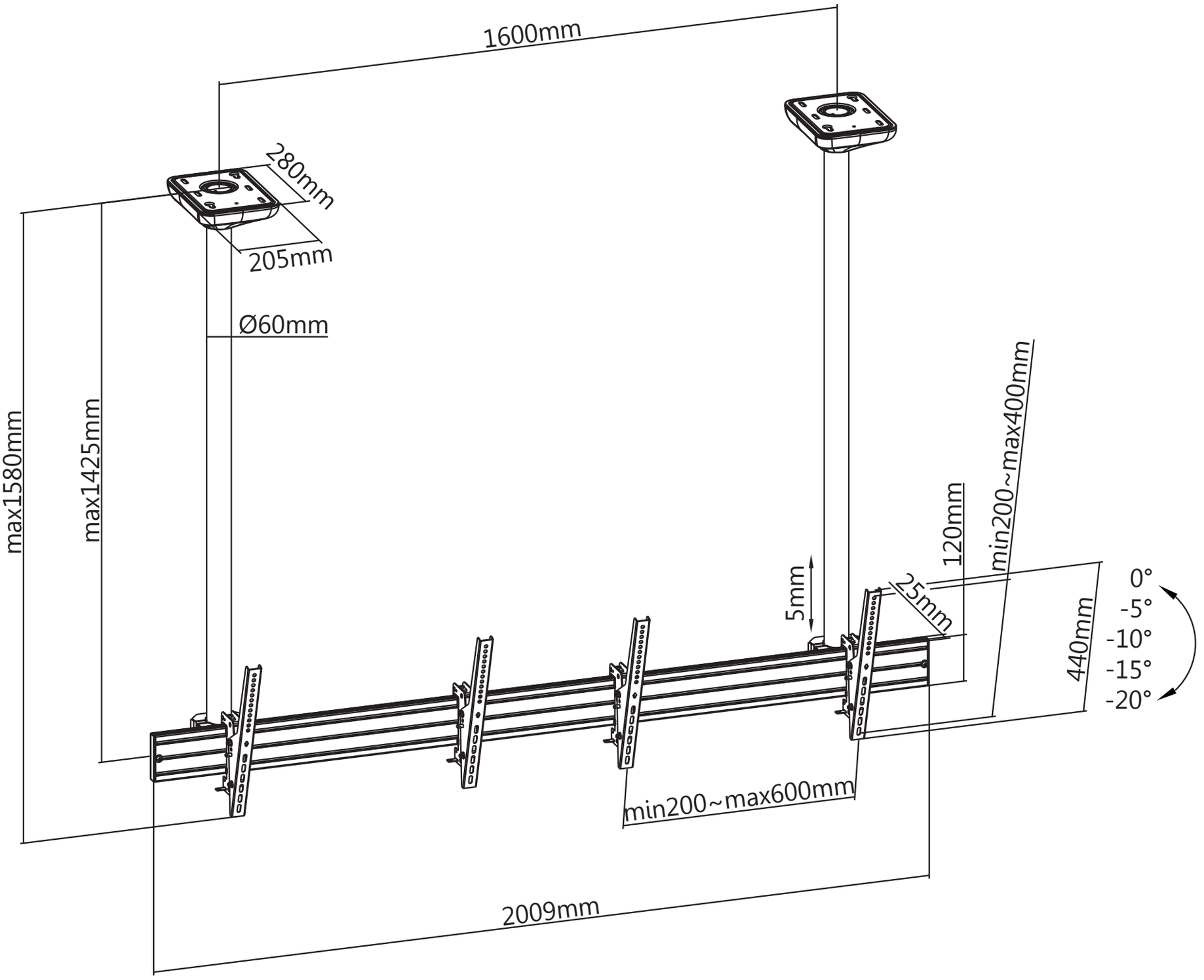
1600mm
280mm
205mm
Ø60mm
max1580mm
max1425mm
5mm
25mm
120mm
min200~max400mm
440mm
0°
-5°
-10°
-15°
-20°
min200~max600mm
2009mm

MTLCMA33S

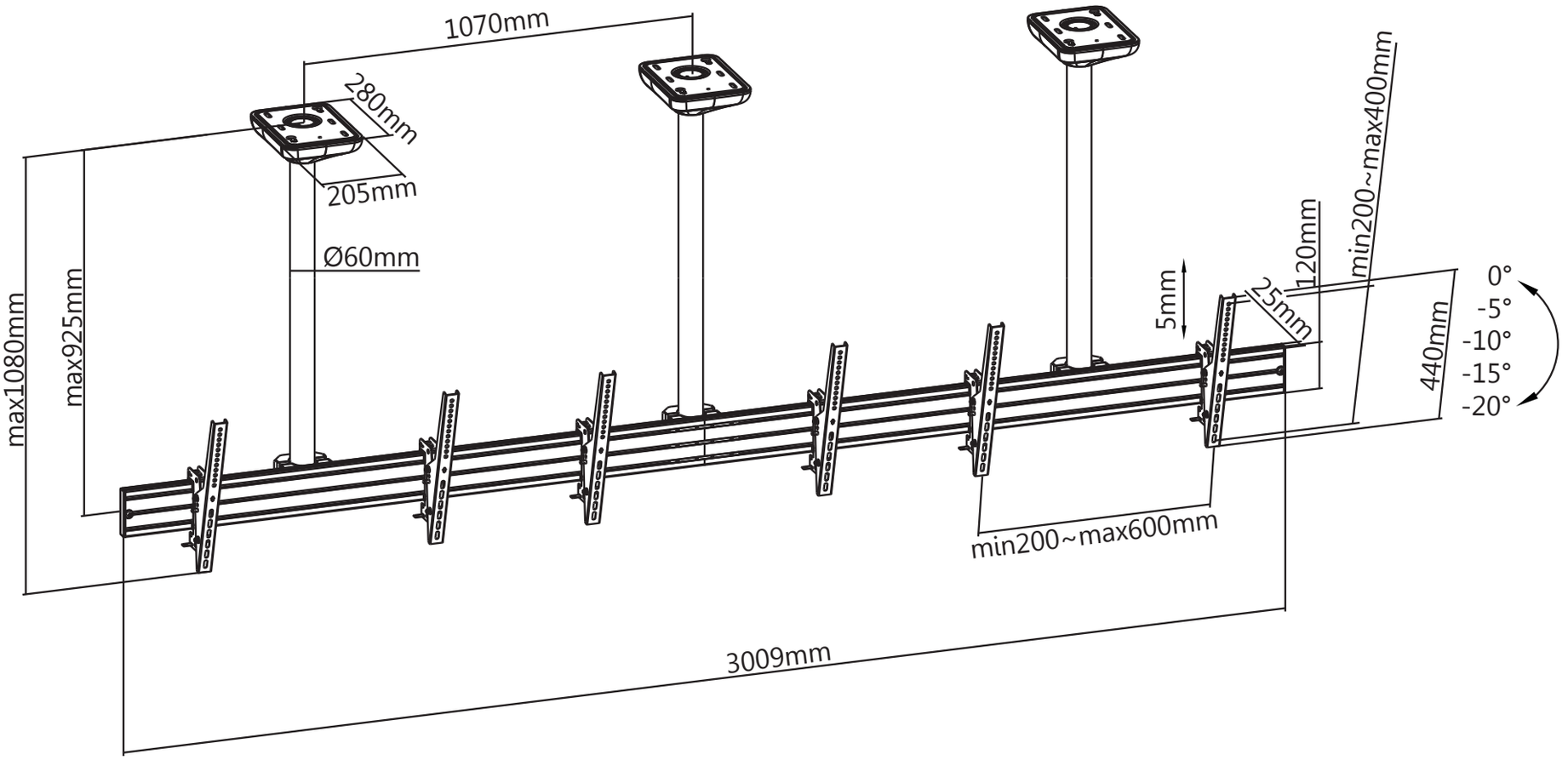
1070mm
280mm
205mm
Ø60mm
max1080mm
max925mm
5mm
25mm
120mm
min200~max400mm
440mm
0°
-5°
-10°
-15°
-20°
min200~max600mm
3009mm

MTLCMA33L

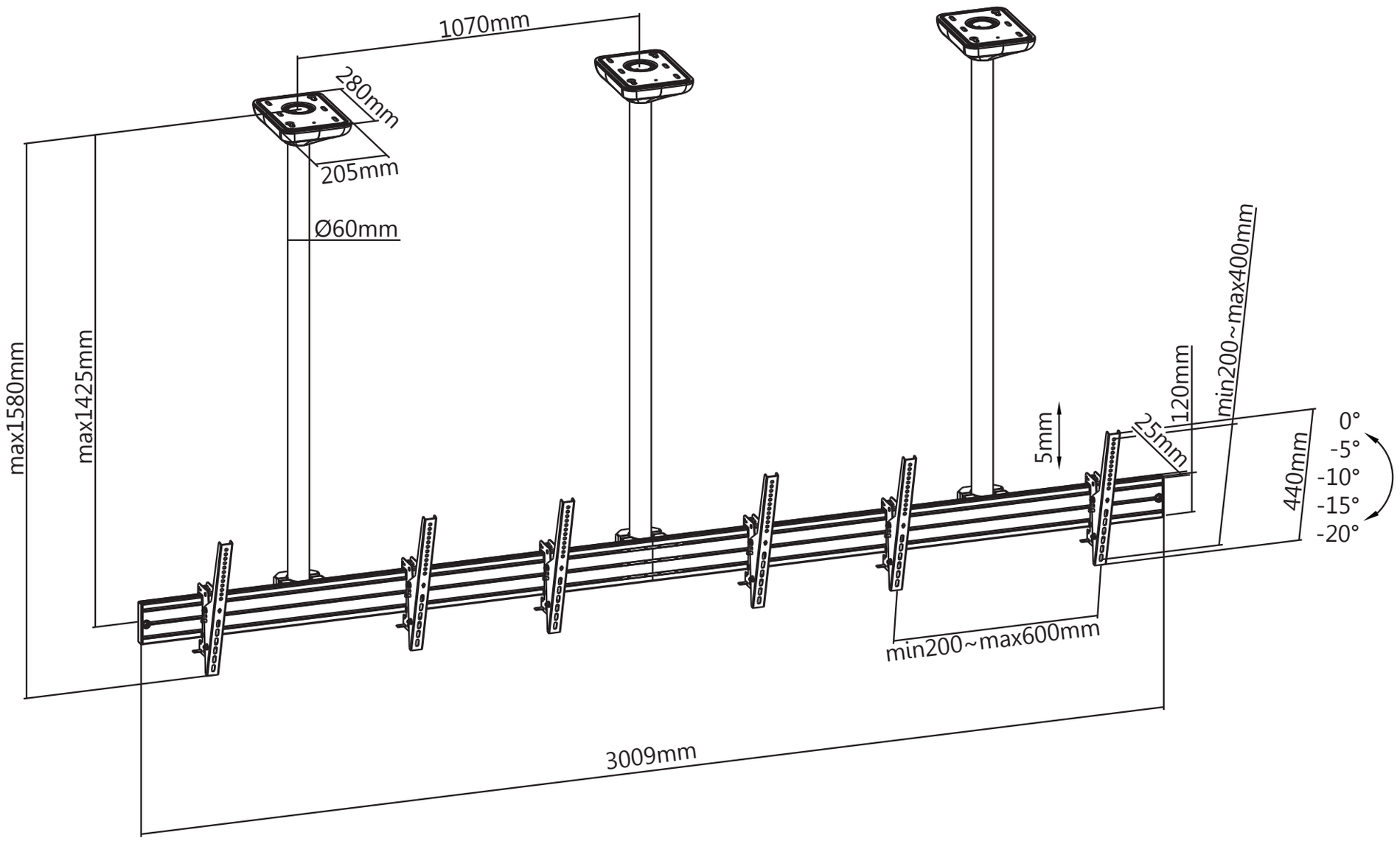
1070mm
280mm
205mm
Ø60mm
max1580mm
max1425mm
5mm
25mm
120mm
min200~max400mm
440mm
0°
-5°
-10°
-15°
-20°
min200~max600mm
3009mm