NEWTRAL

USER MANUAL

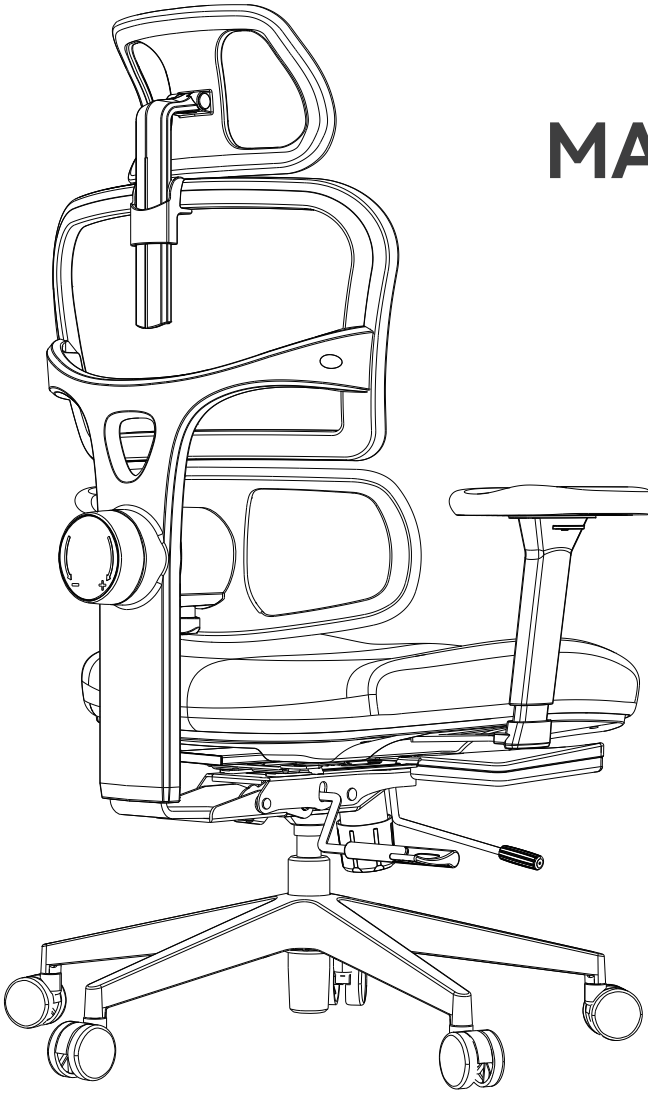

User Manual

Parts List

(Please refer to the actual size. Each type of screw and washer has one reserved as a spare.)

A 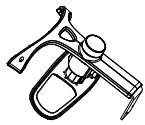 1PC	B 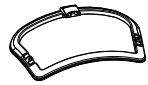 1PC	C 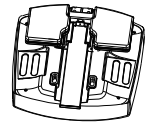 1PC	D 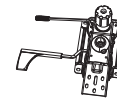 1PC
E 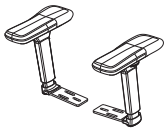 1SET	F  1PC	G  M6*16mm 2PCS	H  M6*50mm 4PCS
I  M6*35mm 6PCS	J  M8*16mm 3PCS	K  1SET	L 1PC
M 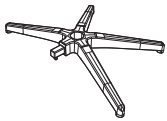 1PC	N  1PC	O  M6*20mm 1PC	P  1PC
Q  5PCS	R  1PC		

Assembly Instructions

(Please refer to the actual size.)

Scan for Video Guide

Step 1

Upper and Lower Backrest Assembling

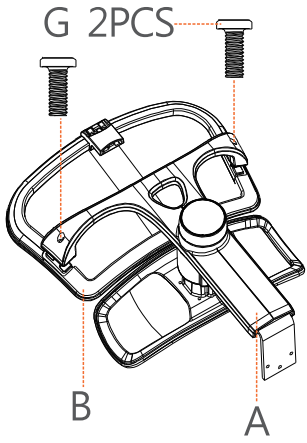

Step 2

Backrest Screw Cover Assembling

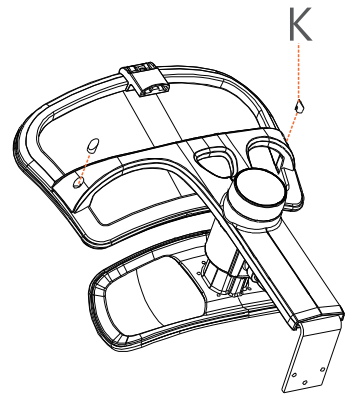

Step 3

Mechanism Assembling

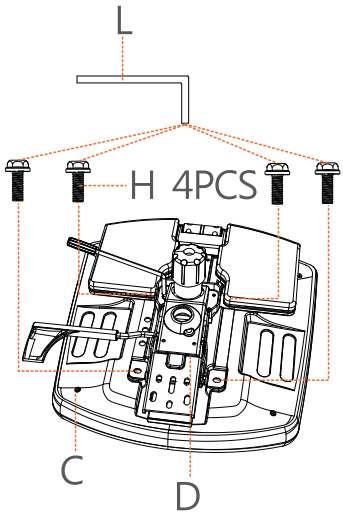

Step 4

Armrest Assembling

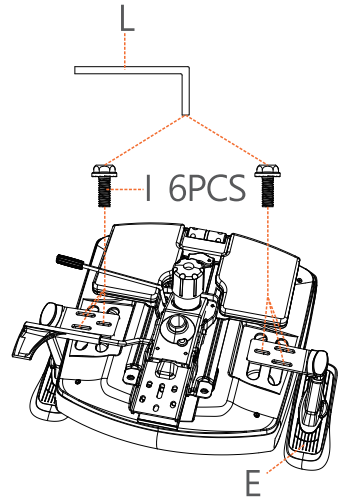

Step 5

Backrest Bracket Assembling

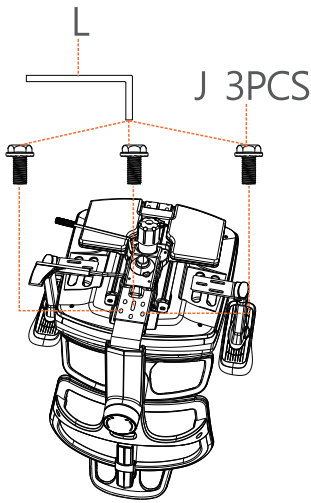

Step 6

Base Assembling

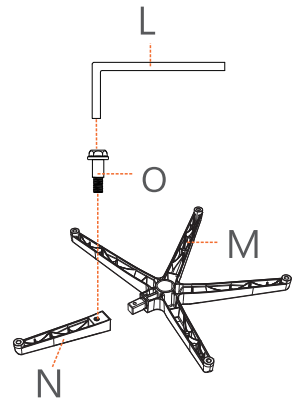

Step 7

Gas Lift Assembling
Wheels Assembling

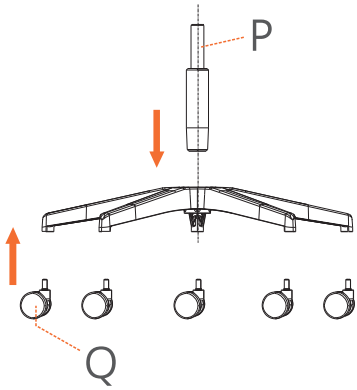

Step 8

Put the Seat and Base Together

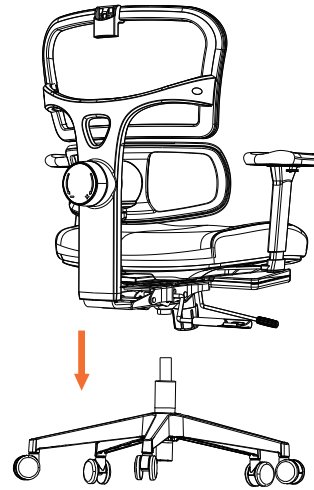

Step 9

Headrest Assembling

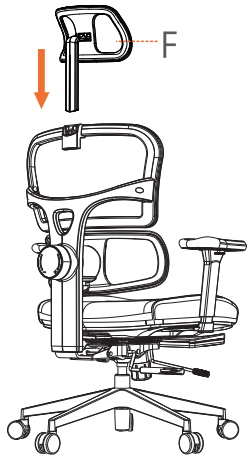

Step 10

Magnetic Cover Plate Assembling

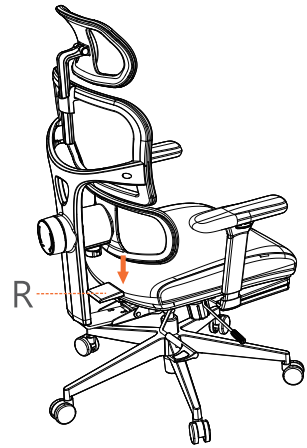

Operation Instructions

(Please refer to the actual size.)

Adjustment Video

Seat Back Height Adjustment

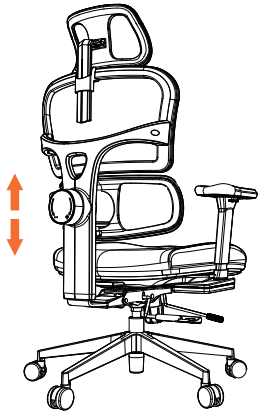

Seat Back Tilt Adjustment



❶ Tilt
❷ Upright

Seat Depth Adjustment



Footrest Adjustment

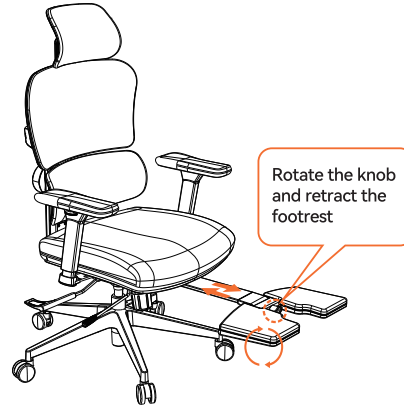

❶ Pull out the Footrest
❷ Retracting the Footrest

Seat Height Adjustment



❶ Lift Up
❷ Lower the Seat

Armrest Adjustment



❶Height Adjustment ❸Rotate Adjustment
❷Front and Back Adjustment
❹Inward and Outward Adjustment

Backrest Tilt Strength Adjustment



Lumbar Support Strength Adjustment

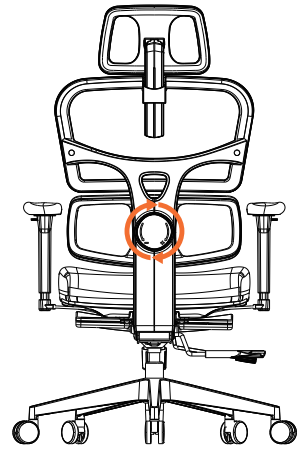

Lumbar Support Lock/Unlock Function

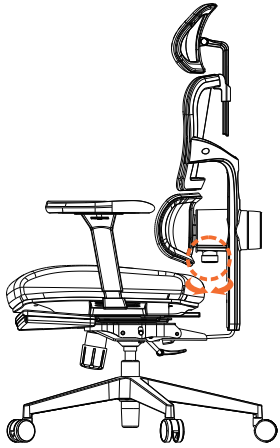

Headrest Adjustment

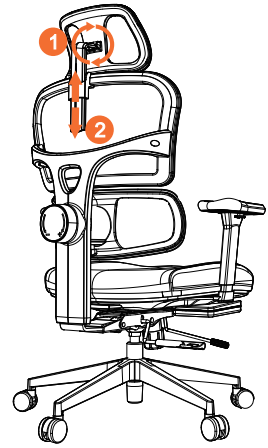

❶Angle Adjustment
❷Up and Down Adjustment

Q&A

Q: The backrest mesh is damaged.
A: Please contact us, and we will arrange a replacement delivery!

Q: What if I receive a damaged or incorrect product?
A: Please check that all parts are properly installed. If the issue persists, the mechanism may be faulty. We recommend sending us a short video for further inspection.

Q: I hear noises when sitting on the chair.
A: Please check if all parts of the chair have been installed tightly. If not, there might be a problem with the mechanism, and we recommend you send us a video for further evidence first.

Q: Why do the armrests wobble?
A: Please first check whether the screws are tightened properly, then inspect the armrest pads for looseness.

Q: The backrest wobbles.
A: The backrest might not be securely installed. Please try reinstalling it.

Q: There is an odor when the chair is unpacked.
A: Please leave the chair in a well-ventilated area for 2–3 days before use.

Q: There are scratches or cracks on the backrest or other parts.
A: We hope this does not affect normal use. You can contact us for replacement parts if needed.

Q: Some parts are missing.
A: Please inform us which parts are missing and provide your order number along with photos of all received parts. We'll report this to the factory and arrange delivery or work with you on a suitable solution.

Q: The chair feels uncomfortable, but I can't identify the issue.
A: We're sorry to hear that. Please send us a photo or short video indicating the issue so we can help locate the problem and offer a suitable solution.

Ergonomic Tips
By Iris Sokol, Ergowell, LLC.
Ergonomic Consultant for Newtral Chair
Copyright of Ergowell, LLC. All Rights Reserved, 2023

Basic Ergonomic Guidelines

So much about Ergonomics is based on adopting good posture, alignment, and body mechanics. It is also about using whatever equipment you are provided with properly and knowing "how" you should work. Adopting good Ergonomic habits will not only make you more comfortable while you work, but more important, it will help prevent injuries from occurring. The following are some basic Ergonomic principles to help get you started.

Ergonomic Guidelines - Seated Position:

- Adjust the chair to fit your body.
- Start at the feet and work up.
- Go through all the adjustments available on your chair.
- Don't tuck your foot under your bottom or sit cross-legged!
- Sit back in the chair with good posture letting the chair fully support your body.

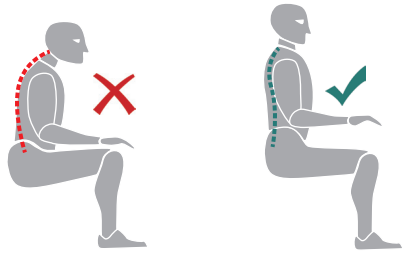

Postural Suggestions - Body Mechanics/Upper Body:

- Keep your shoulders down and relaxed.
- Try to have your neck elongated (think of top of the head reaching toward the ceiling as the shoulders are pressing downwards).
- Never cradle the phone! Use a headset, or speaker phone.
- Keep chest open, sternum lifted (think of buttons popping on a shirt).
- Try to use your middle back muscles having them slightly contracted.

Postural suggestions - Body Mechanics/Lower Body:

- Avoid sitting/leaning back on the tailbone.
- Try to sit up on the sit bones.
- Keep space between the lower rib and the top of the hips (3- 4 fingers distance).
- Engage the abdominals and connect to your core to sit up tall.
- Sit upright when working consistently, then lean back when doing alternative tasks like reading, talking on the phone…etc. Changing your position often throughout the day is so healthy for your body!

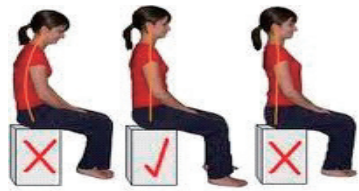

Sitting posture - (Dos & Don'ts):

- Don't:
  - Slump-sit or sit back on tailbone.
  - Lean forward, or perch on edge of chair.
  - Sit for long periods of time.
- Do:
  - Have both feet flat on the floor when sitting.
  - Maintain proper posture.
  - Use your core muscles when sitting.
  - Sit up tall on the sit bones.

Take a Break!

- For every 20 minutes of keying, take your hands off the keyboard and do an alternative task for 1-2 minutes.
- For every 50 minutes of sitting or standing (both are static postures), move your body consistently for 5-10 minutes. This will help break up the tension that builds from holding a static posture.
- Stand up to answer phone and try to walk around your office (using a wireless headset helps with this).
- Stretch at your workstation during the day.
- Drink plenty of water.
- To help your eyes, look at something in the distance, blink and refocus.

NEWTRAL

Independent R&D | Expert Certifications | Utility Patents